MNC－103

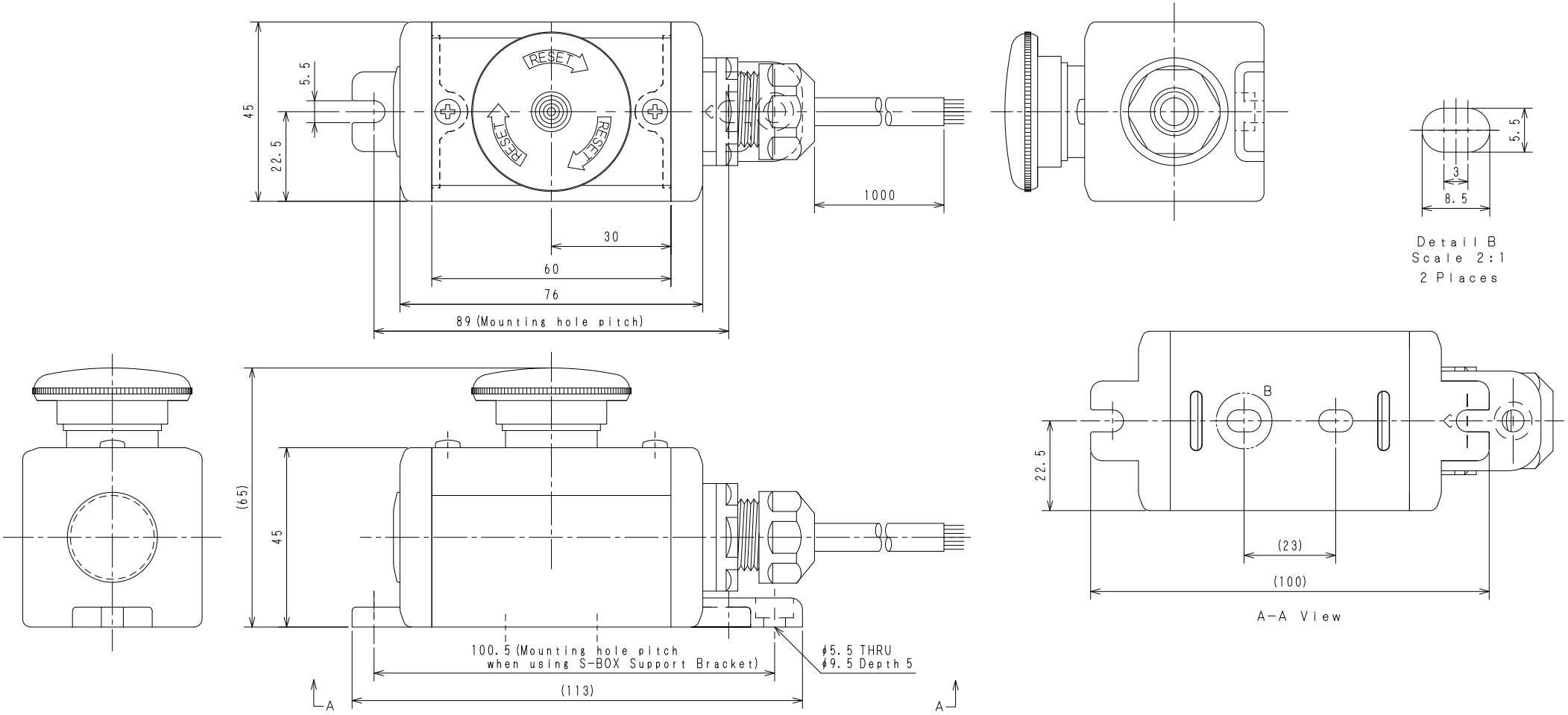
RESET
RESET
RESET
45
5.5
22.5
30
60
76
89 (Mounting hole pitch)
1000
5.5
3
8.5
Detail B
Scale 2:1
2 Places
(65)
45
100.5 (Mounting hole pitch
when using S-BOX Support Bracket)
(113)
φ5.5 THRU
φ9.5 Depth 5
A
A
B
22.5
(23)
(100)
A－A View