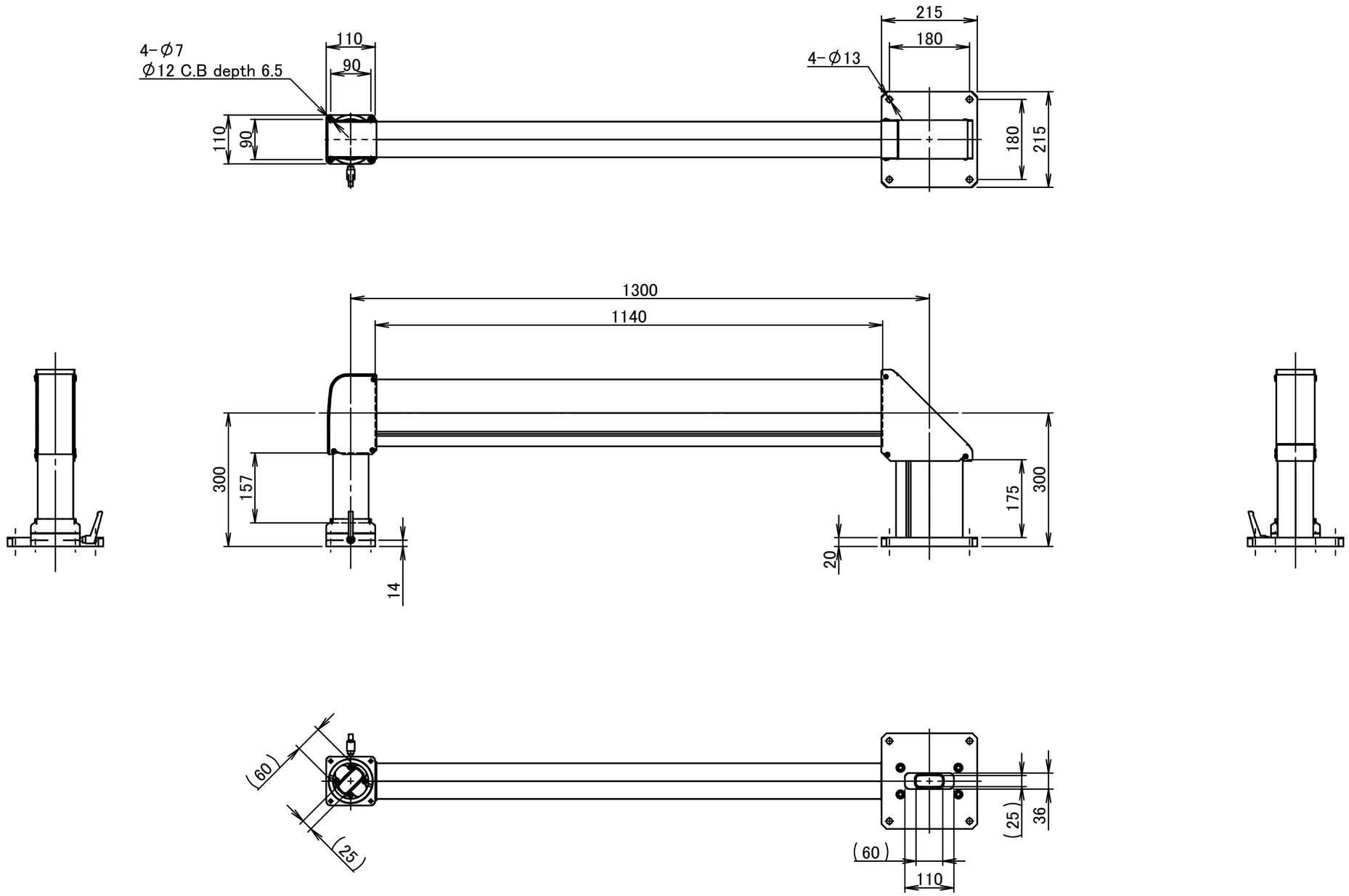C1A-205X	ﾀﾞｸﾄﾀｲﾌﾟ 3LL(H300xD1300xV300)