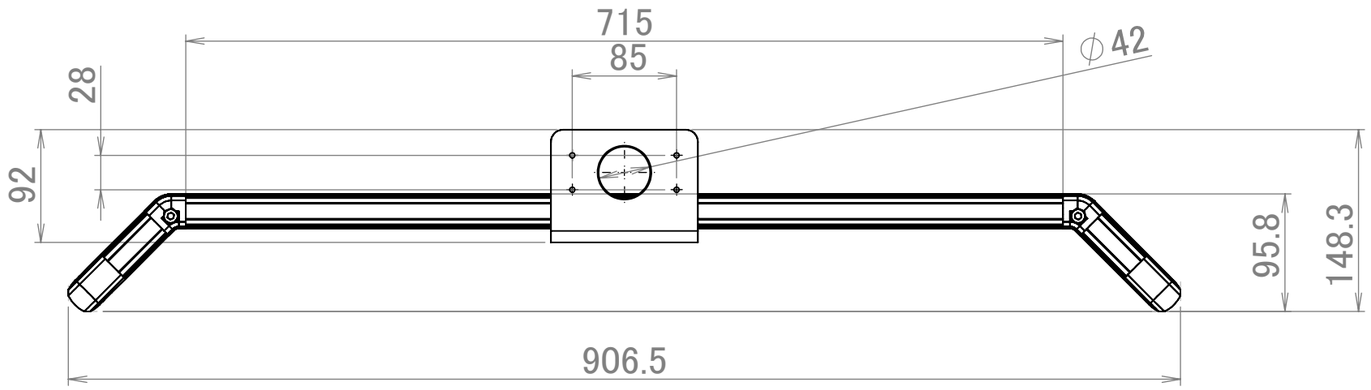
715
85
φ42
28
92
95.8
148.3
906.5

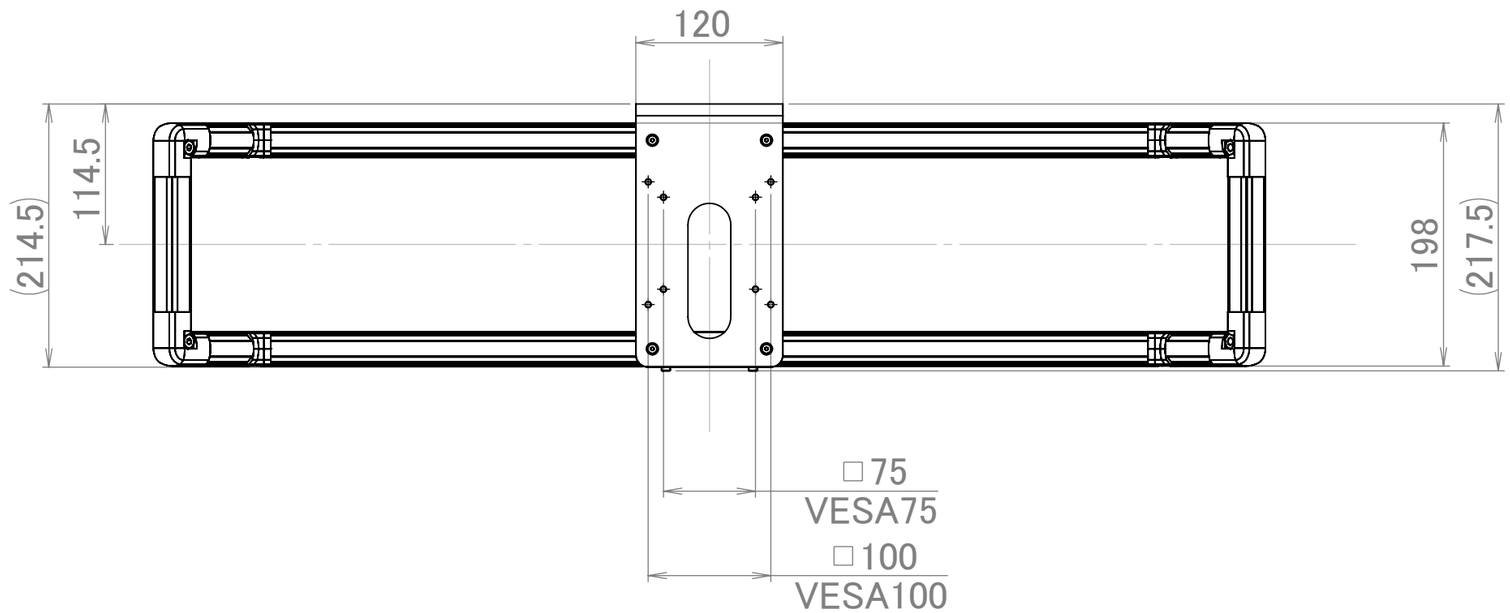
120
114.5
(214.5)
198
(217.5)
□75
VESA75
□100
VESA100

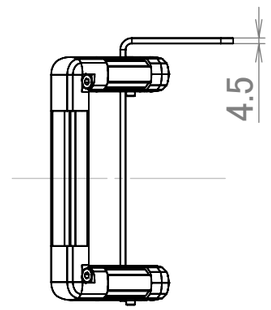
4.5

C1A-M06